C-220 (EU) exploded drawing

This image is for illustration purpose only

Hacona Kft.
H-1165 Budapest,
Ujszasz u. 45/b, T ep.
Hungary

Tel.: +36 (1) 401 3030
Fax: +36 (1) 401 3031
E-mail: mail@hacona.com
Web: www.hacona.com

VAT No.:
HU10406634

Bank: OTP Bank Nyrt. 1163 Budapest, Jokai u. 1/b.
Account No.: EUR IBAN: HU 18 1176 3165 0734 7885 0000 0000
SWIFT-BIC: OTPVHUHB
USD IBAN: HU 23 1176 3165 1320 7018 0000 0000
SWIFT-BIC: OTPVHUHB

C-220 Tabletop impulse heat sealer (EU)

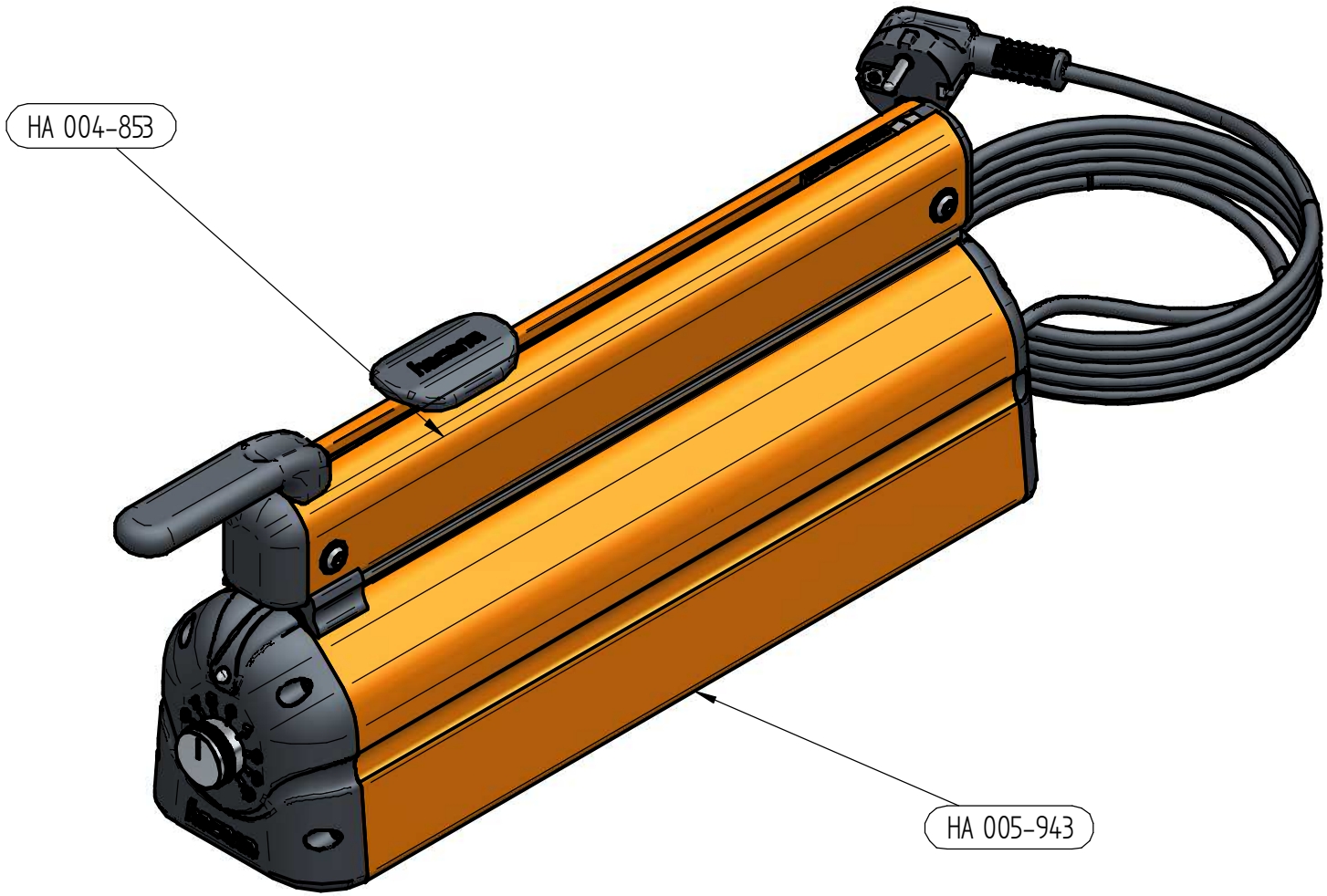

Hacona Kft. Hungary, H-1165 Budapest, Ujszasz u. 45/b, Tep. ▪ Tel.: +36 (1) 401 3030 ▪ Fax: +36 (1) 401 3031 ▪ E-mail: mail@hacona.com ▪ Web: www.hacona.com

Exploded drawing of HA 005-943

C-220 Tabletop impulse heat sealer (EU)

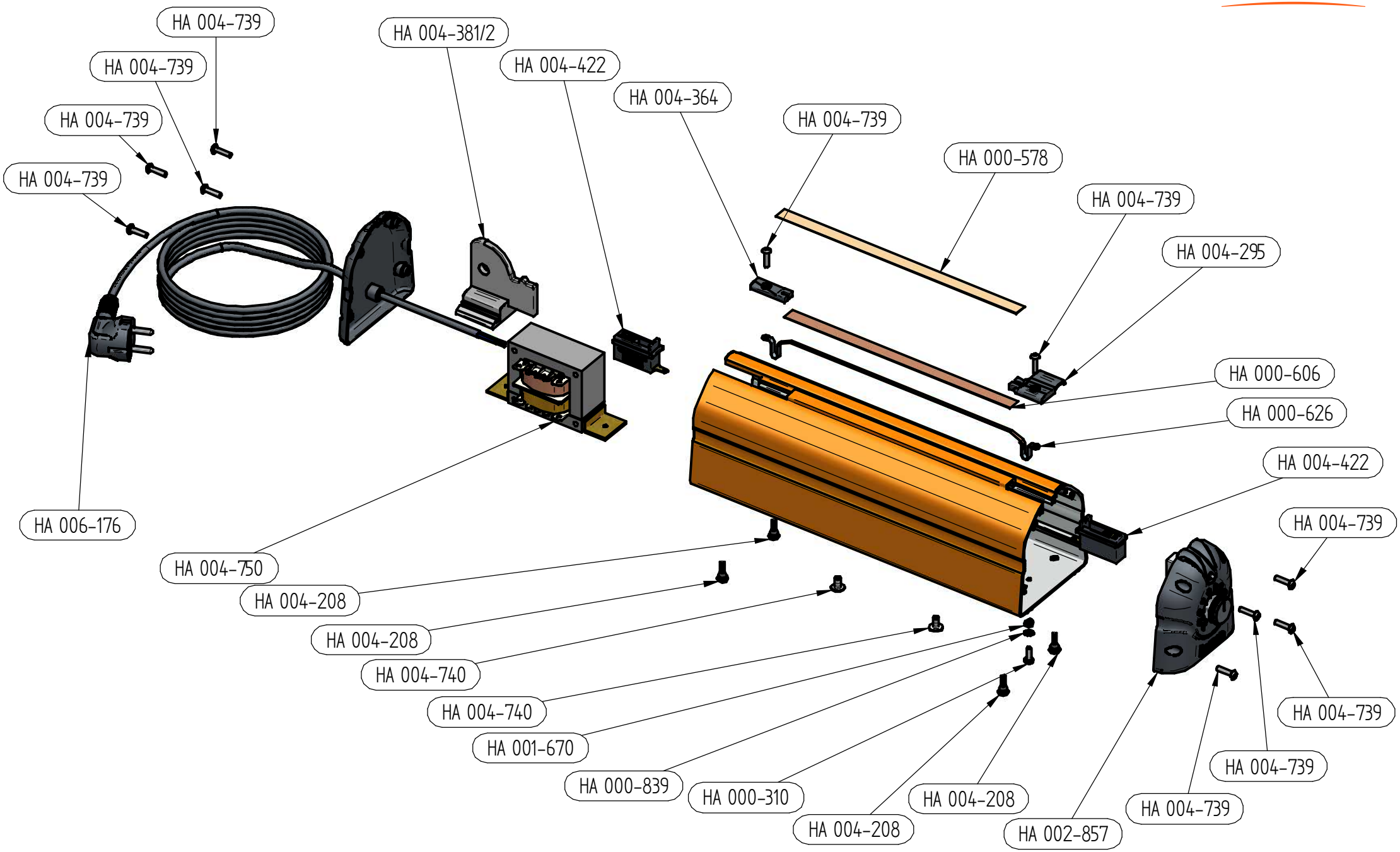

Hacona Kft. Hungary, H-1165 Budapest, Ujszasz u. 45/b, Tep. ▪ Tel.: +36 (1) 401 3030 ▪ Fax: +36 (1) 401 3031 ▪ E-mail: mail@hacona.com ▪ Web: www.hacona.com

Exploded drawing of HA 004-853

C-220 Tabletop impulse heat sealer (EU)

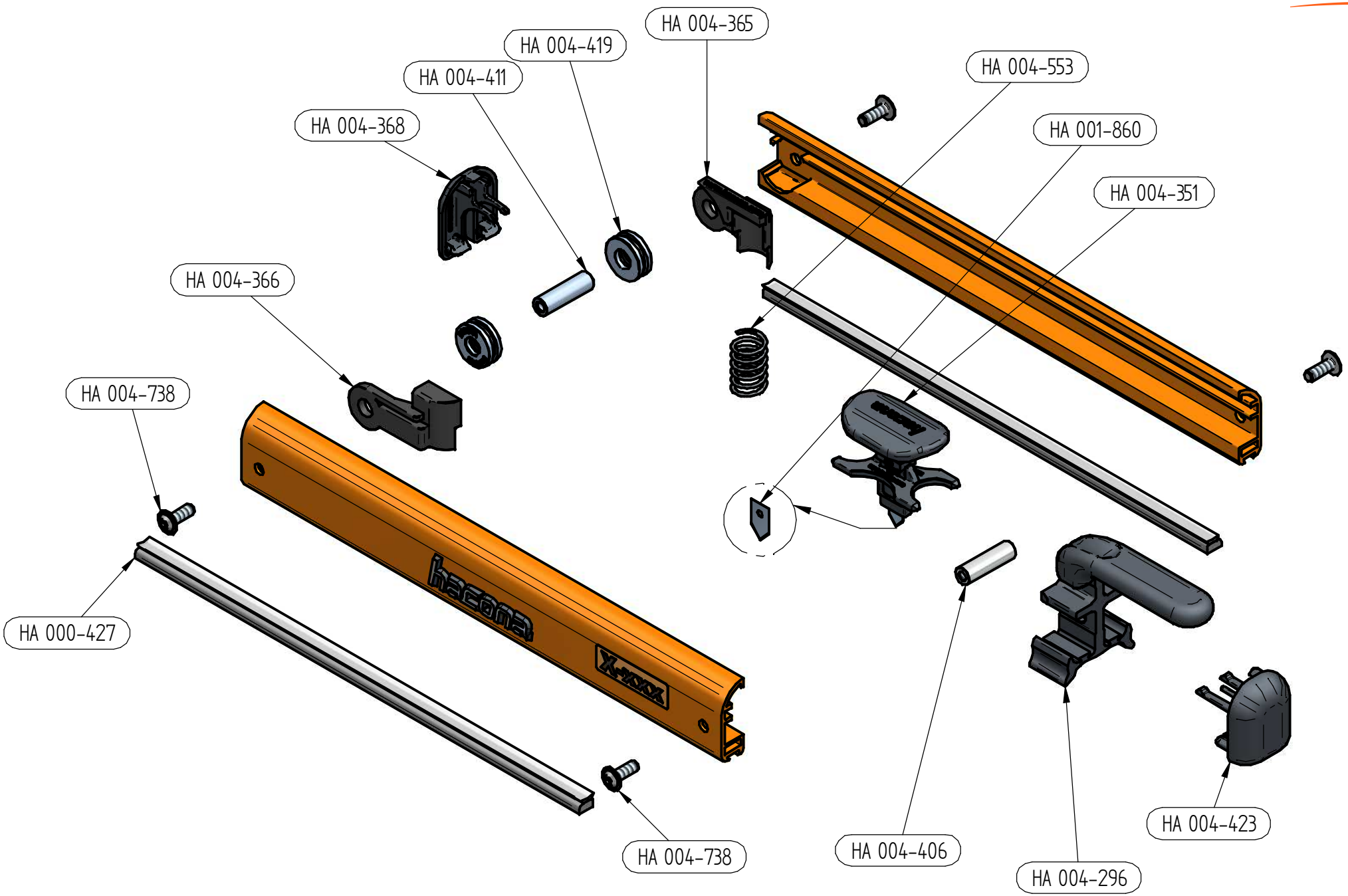

Hacona Kft. Hungary, H-1165 Budapest, Ujszasz u. 45/b, Tep. ▪ Tel.: +36 (1) 401 3030 ▪ Fax: +36 (1) 401 3031 ▪ E-mail: mail@hacona.com ▪ Web: www.hacona.com

Item No.	Description	Included in
HA 000-310	Screw M4x12 DF-BK-HG	
HA 000-414	C/S-type cutting knife kit (6 pcs. / kit)	
HA 000-509	C-type silicone rubber kit	
HA 000-578	C-type upper teflon cover (meter)	HA 001-334 C-220 sealing wire kit
HA 000-606	Not available separately	HA 001-334 C-220 sealing wire kit
HA 000-626	Not available separately	HA 001-334 C-220 sealing wire kit
HA 000-839	Screw washer M4 HG	
HA 001-670	Self locking nut M4 HG	
HA 002-857	C-type front cover with control panel (assembly) (230V)	
HA 004-208	C-type rubber outsole	
HA 004-295	C-type front-side sealingwire tentioning unit cap	
HA 004-296	C-type handle with funnel	
HA 004-351	C-type knife (assembly)	
HA 004-364	C-type back-side sealingwire tentioning unit cap	
HA 004-365	Not available separately	HA 006-377 C-type opener spring housing kit
HA 004-366	Not available separately	HA 006-377 C-type opener spring housing kit
HA 004-368	C-type sealing bar back lid	
HA 004-381	C-type hinge	
HA 004-406	C-type sealing bar spacer	
HA 004-411	C-type hinge shaft	
HA 004-419	C-type axial bearing	
HA 004-422	C-type sealingwire tensioning unit (assembly)	
HA 004-423	C-type sealing bar front lid with magnet v3.0 (assembly)	
HA 004-553	C-220/320 sealing bar opening spring	
HA 004-738	Screw M6x16	
HA 004-739	Screw M4x16 DF-BK-HG	
HA 004-740	Screw M5x10 DF-BK-HG	
HA 004-750	C-220 transformer (230V)	
HA 006-176	C-220 back cover with power cord (assembly) (230V)	

Hacona Kft. Hungary, H-1165 Budapest, Ujszasz u. 45/b, T ep. ▪ Tel.: +36 (1) 401 3030 ▪ Fax: +36 (1) 401 3031 ▪ E-mail: mail@hacona.com ▪ Web: www.hacona.com